Thermo-chiller Inverter Type Large Type
Air-cooled 200 V Type
Series HRSH

(UL Standards)

How to Order

HRSH 250 - A F - 20 - □ S

Cooling capacity

100	10.5 kW
150	15.7 kW
200	20.5 kW
250	25 kW
300	28 kW

Cooling method

A	Air-cooled refrigeration

Pipe thread type

—	Rc
F	G (with Rc-G conversion fitting)
N	NPT (with Rc-NPT conversion fitting)

Power supply

20	3-phase 200 V AC (50 Hz) 3-phase 200 to 230 V AC (60 Hz)

Option

—	None
A	With caster adjuster-foot kit
K Note)	With fluid fill port

- When multiple options are combined, indicate symbols in alphabetical order.

Note) This is a manual fluid fill port that is different from the automatic fluid fill port. Fluid can be supplied manually into the tank without removing the side panel.
(Fluid can be supplied manually for the model without the symbol K if the side panel is removed.)

CE/UL Compliant

Note) Equipped with earth leakage breaker with a breaker handle.

Specifications

Model			HRSH100-A□-20-□S	HRSH150-A□-20-□S	HRSH200-A□-20-□S	HRSH250-A□-20-□S	HRSH300-A□-20-□S
Cooling method			Air-cooled refrigeration				
Refrigerant			R410A (HFC): GWP2088				
Control method			PID control				
Ambient temperature/Altitude Note 1), Note 8)		[°C]	Temperature: -20 to 45, Altitude: less than 3000 m				
Circulating fluid system	Circulating fluid Note 2)		Tap water, 15 to 40 % Ethylene glycol aqueous solution, Deionised water				
	Set temperature range Note 1)	[°C]	5 to 35				
	Cooling capacity Note 3), Note 8)	[kW]	10.5	15.7	20.5	25	28
	Heating capacity Note 4)	[kW]	2.5	3	5.5	7.5	
	Temperature stability Note 5)	[°C]	±0.1				
	Pump capacity: Rated flow (Outlet)	[l/min]	45 (0.43 MPa)	45 (0.45 MPa)		125 (0.5 MPa)	
	Pump capacity: Maximum flow rate	[l/min]	120	130		180	
	Pump capacity: Maximum pump head	[m]	50			80	
	Settable pressure range Note 6)	[MPa]	0.1 to 0.5			0.1 to 0.8	
	Minimum operating flow rate Note 7)	[l/min]	20	25		40	
	Tank capacity	[L]	25	42		60	
	Circulating fluid outlet, circulating fluid return port		Rc 1 (Symbol F: G 1, Symbol N: NPT 1)				
	Tank drain port		Rc 3/4 (Symbol F: G 3/4, Symbol N: NPT 3/4)				
	Automatic fluid fill system (Standard): Supply side pressure range	[MPa]	0.2 to 0.5				
	Automatic fluid fill system (Standard): Supply side fluid temperature	[°C]	5 to 35				
	Automatic fluid fill system (Standard): Automatic fluid fill port		Rc 1/2 (Symbol F: G 1/2, Symbol N: NPT 1/2)				
	Automatic fluid fill system (Standard): Overflow port		Rc 1 (Symbol F: G 1, Symbol N: NPT 1)				
	Fluid contact material	Metal	Stainless steel, Copper (Heat exchanger brazing), Brass (Y-strainer)				
		Resin	PTFE, PU, FKM, EPDM, PVC, NBR, POM, PE, NR				
Electrical system	Power supply		3-phase 200 V AC (50 Hz), 3-phase 200 to 230 V AC (60 Hz) Allowable voltage range ±10 % (No continuous voltage fluctuation)				
	Rated operating current Note 5)	A	14	17	25	34	36
	Rated power consumption Note 5)	[kW (kVA)]	4.5 (4.9)	5.8 (6)	8.4 (8.7)	10.4 (11.6)	11.1 (12.2)
Noise level (Front 1 m/Height 1 m) Note 5)		[dB (A)]	68				71
Waterproof specification			IPX4				
Accessories			Alarm code list stickers 2 pcs. (English 1 pc./Japanese 1 pc.), Operation Manual (for installation/operation) 2 pcs. (English 1 pc./Japanese 1 pc.), Y-strainer (40 meshes) 25A, Barrel nipple 25A, Anchor bolt fixing brackets 2 pcs. (including 6 M8 bolts) Note 9)				
Weight (dry state)		[kg]	Approx. 180	Approx. 215		Approx. 280	

Note 1) Use a 15 % ethylene glycol aqueous solution if operating in a place where the ambient temperature is from -5 to 10 °C and/or circulating fluid temperature is 10 °C or less.
Use a 40 % ethylene glycol aqueous solution if operating in a place where the ambient temperature is from -20 to 5 °C.
Note 2) Use fluid in condition below as the circulating fluid.
Tap water: Standard of The Japan Refrigeration And Air Conditioning Industry Association (JRA GL-02-1994)
15 to 40 % ethylene glycol aqueous solution: diluted by tap water in condition above without any additives such as antiseptics.
Deionised water: Electric conductivity 1 μS/cm or higher (Electric resistivity 1 MΩ·cm or lower)
Note 3) ① Ambient temperature: 32 °C, ② Circulating fluid: Tap water, ③ Circulating fluid temperature: 20 °C, ④ Circulating fluid flow rate: Rated flow, ⑤ Power supply: 200 V AC
Note 4) ① Ambient temperature: 32 °C, ② Circulating fluid: Tap water, ③ Circulating fluid flow rate: Rated flow, ④ Power supply: 200 V AC
Note 5) ① Ambient temperature: 32 °C, ② Circulating fluid: Tap water, ③ Circulating fluid temperature: 20 °C, ④ Load: Same as the cooling capacity, ⑤ Circulating fluid flow rate: Rated flow, ⑥ Power supply: 200 V AC, ⑦ Piping length: Shortest
Note 6) With the pressure control mode by inverter. When the pressure control mode is not used, the pump power frequency set mode can be used.
Note 7) Fluid flow rate to maintain the cooling capacity and the temperature stability. If the actual flow rate is lower than this, please install a by-pass piping.
Note 8) If the product is used at altitude of 1000 m or higher, refer to "Operating Environment/Storage Environment" (page 39) Item 14 "∗ For altitude of 1000 m or higher".
Note 9) The anchor bolt fixing brackets (including 6 M8 bolts) are used for fixing to wooden skids when packaging the thermo-chiller. No anchor bolt is included.

Thermo-chiller Inverter Type Large Type
Water-cooled 200 V Type
Series HRSH

(UL Standards)

How to Order

HRSH 250 – W F – 20 – □ S

Cooling capacity

100	11.5 kW
150	15.7 kW
200	20.6 kW
250	24 kW

Cooling method

W	Water-cooled refrigeration

Pipe thread type

—	Rc
F	G (with Rc-G conversion fitting)
N	NPT (with Rc-NPT conversion fitting)

Power supply

20	3-phase 200 V AC (50 Hz) 3-phase 200 to 230 V AC (60 Hz)

Option

—	None
A	With caster adjuster-foot kit
K Note)	With fluid fill port

• When multiple options are combined, indicate symbols in alphabetical order.

Note) This is a manual fluid fill port that is different from the automatic fluid fill port. Fluid can be supplied manually into the tank without removing the side panel.
(Fluid can be supplied manually for the model without the symbol K if the side panel is removed.)

CE/UL Compliant

Note) Equipped with earth leakage breaker with a breaker handle.

Specifications

Model			HRSH100-W□-20-□S	HRSH150-W□-20-□S	HRSH200-W□-20-□S	HRSH250-W□-20-□S
Cooling method			Water-cooled refrigeration			
Refrigerant			R410A (HFC): GWP2088			
Control method			PID control			
Ambient temperature/Altitude Note 1), Note 8)		[°C]	Temperature: 2 to 45, Altitude: less than 3000 m			
Circulating fluid system	Circulating fluid Note 2)		Tap water, 15 % Ethylene glycol aqueous solution, Deionised water			
	Set temperature range Note 1)	[°C]	5 to 35			
	Cooling capacity Note 3), Note 8)	[kW]	11.5	15.7	20.6	24
	Heating capacity Note 4)	[kW]	2.5	3.5	4.0	7.2
	Temperature stability Note 5)	[°C]	±0.1			
	Pump capacity: Rated flow (Outlet)	[l/min]	45 (0.43 MPa)	45 (0.45 MPa)		
	Pump capacity: Maximum flow rate	[l/min]	120	130		
	Pump capacity: Maximum pump head	[m]	50			
	Settable pressure range Note 6)	[MPa]	0.1 to 0.5			
	Minimum operating flow rate Note 7)	[l/min]	25			
	Tank capacity	[L]	42			
	Circulating fluid outlet, circulating fluid return port		Rc 1 (Symbol F: G 1, Symbol N: NPT 1)			
	Tank drain port		Rc 3/4 (Symbol F: G 3/4, Symbol N: NPT 3/4)			
	Automatic fluid fill system (Standard): Supply side pressure range	[MPa]	0.2 to 0.5			
	Automatic fluid fill system (Standard): Supply side fluid temperature	[°C]	5 to 35			
	Automatic fluid fill system (Standard): Automatic fluid fill port		Rc 1/2 (Symbol F: G 1/2, Symbol N: NPT 1/2)			
	Automatic fluid fill system (Standard): Overflow port		Rc 1 (Symbol F: G 1, Symbol N: NPT 1)			
	Fluid contact material	Metal	Stainless steel, Copper (Heat exchanger brazing), Brass (Y-strainer)			
		Resin	PTFE, PU, FKM, EPDM, PVC, NBR, POM, PE, NR			
Facility water system	Supply side pressure range	[MPa]	0.3 to 0.5			
	Supply side temperature range	[°C]	5 to 40			
	Required flow	[l/min]	25	30	50	55
	Facility water pressure differential	[MPa]	0.3 or more			
	Facility water inlet/outlet		Rc 1 (Symbol F: G 1, Symbol N: NPT 1)			
	Fluid contact material	Metal	Stainless steel, Copper (Heat exchanger brazing), Brass, Bronze			
		Resin	PTFE, EPDM, NBR			
Electrical system	Power supply		3-phase 200 V AC (50 Hz), 3-phase 200 to 230 V AC (60 Hz), Allowable voltage range ±10 % (No continuous voltage fluctuation)			
	Rated operating current Note 5)	[A]	14	17	21	25
	Rated power consumption Note 5)	[kW (kVA)]	4.2 (4.7)	5.3 (5.8)	6.6 (7.0)	8.0 (8.4)
Noise level (Front 1 m/Height 1 m) Note 5)		[dB (A)]	61	60		61
Waterproof specification			IPX4			
Accessories			Alarm code list stickers 2 pcs. (English 1 pc./Japanese 1 pc.), Operation Manual (for installation/operation) 2 pcs. (English 1 pc./Japanese 1 pc.), Y-strainer (40 meshes) 25A, Barrel nipple 25A, Anchor bolt fixing brackets 2 pcs. (including 6 M8 bolts) Note 9)			
Weight (dry state)		[kg]	Approx. 150	Approx. 180		

Note 1) Use a 15 % ethylene glycol aqueous solution if operating in a place where the ambient temperature and/or circulating fluid temperature is 10 °C or less.
Note 2) Use fluid in condition below as the circulating fluid.
Tap water: Standard of The Japan Refrigeration And Air Conditioning Industry Association (JRA GL-02-1994)
15 % ethylene glycol aqueous solution: diluted by tap water in condition above without any additives such as antiseptics. Deionised water: Electric conductivity 1 μS/cm or higher (Electric resistivity 1 MΩ·cm or lower)
Note 3) ① Facility water temperature: 32 °C, ② Circulating fluid: Tap water, ③ Circulating fluid temperature: 20 °C, ④ Circulating fluid flow rate: Rated flow, ⑤ Power supply: 200 V AC
Note 4) ① Facility water temperature: 32 °C, ② Circulating fluid: Tap water, ③ Circulating fluid flow rate: Rated flow, ④ Power supply: 200 V AC
Note 5) ① Facility water temperature: 32 °C, ② Circulating fluid: Tap water, ③ Circulating fluid temperature: 20 °C, ④ Load: Same as the cooling capacity, ⑤ Circulating fluid flow rate: Rated flow, ⑥ Power supply: 200 V AC, ⑦ Piping length: Shortest
Note 6) With the pressure control mode by inverter. When the pressure control mode is not used, the pump power frequency set mode can be used.
Note 7) Fluid flow rate to maintain the cooling capacity and the temperature stability. If the actual flow rate is lower than this, please install a by-pass piping.
Note 8) If the product is used at altitude of 1000 m or higher, refer to "Operating Environment/Storage Environment" (page 39) Item 14 "∗ For altitude of 1000 m or higher".
Note 9) The anchor bolt fixing brackets (including 6 M8 bolts) are used for fixing to wooden skids when packaging the thermo-chiller. No anchor bolt is included.

Thermo-chiller Inverter Type Large Type
Air-cooled 400 V Type
Series HRSH

CE RoHS

How to Order

HRSH 250 - A F - 40 - □

Cooling capacity

100	10.5 kW
150	15.7 kW
200	20.5 kW
250	25 kW
300	28 kW

Cooling method

A	Air-cooled refrigeration

Pipe thread type

—	Rc
F	G (with Rc-G conversion fitting)
N	NPT (with Rc-NPT conversion fitting)

Power supply

40	3-phase 380 to 415 V AC (50 / 60 Hz)

Option

—	None
A	With caster adjuster-foot kit
K Note)	With fluid fill port

Note) This is a manual fluid fill port that is different from the automatic fluid fill port. Fluid can be supplied manually into the tank without removing the side panel. (Fluid can be supplied manually for the model without the symbol K if the side panel is removed.)

Specifications

Model				HRSH100-A□-40-□	HRSH150-A□-40-□	HRSH200-A□-40-□	HRSH250-A□-40-□	HRSH300-A□-40-□
Cooling method				Air-cooled refrigeration				
Refrigerant				R410A (HFC): GWP2088				
Control method				PID control				
Ambient temperature/Altitude Note 1), Note 8)			[°C]	Temperature: -20 to 45, Altitude: less than 3000 m				
Circulating fluid system	Circulating fluid Note 2)			Tap water, 15 to 40 % Ethylene glycol aqueous solution, Deionised water				
	Set temperature range Note 1)		[°C]	5 to 35				
	Cooling capacity Note 3), Note 8)		[kW]	10.5	15.7	20.5	25	28
	Heating capacity Note 4)		[kW]	2.5	3	5.5	7.5	
	Temperature stability Note 5)		[°C]	±0.1				
	Pump capacity	Rated flow (Outlet)	[l/min]	45 (0.43 MPa)	45 (0.45 MPa)		125 (0.5 MPa)	
		Maximum flow rate	[l/min]	120	130		180	
		Maximum pump head	[m]	50			80	
	Settable pressure range Note 6)		[MPa]	0.1 to 0.5			0.1 to 0.8	
	Minimum operating flow rate Note 7)		[l/min]	20	25		40	
	Tank capacity		[L]	25	42		60	
	Circulating fluid outlet, circulating fluid return port			Rc 1 (Symbol F: G 1, Symbol N: NPT 1)				
	Tank drain port			Rc 3/4 (Symbol F: G 3/4, Symbol N: NPT 3/4)				
	Automatic fluid fill system (Standard)	Supply side pressure range	[MPa	0.2 to 0.5				
		Supply side fluid temperature	[°C]	5 to 35				
		Automatic fluid fill port		Rc 1/2 (Symbol F: G 1/2, Symbol N: NPT 1/2)				
		Overflow port		Rc 1 (Symbol F: G 1, Symbol N: NPT 1)				
	Fluid contact material		Metal	Stainless steel, Copper (Heat exchanger brazing), Brass (Y-strainer)				
			Resin	PTFE, PU, FKM, EPDM, PVC, NBR, POM, PE, NR				
Electrical system	Power supply			3-phase 380 to 415 V AC (50 / 60 Hz) Allowable voltage range ±10 % (No continuous voltage fluctuation)				
	Earth leakage breaker	Rated current	[A]	20	30			
		Sensitivity of leak current	[mA]	30				
	Rated operating current Note 5)		[A]	7.4	9.3	12.8	16	18
	Rated power consumption Note 5)		[kW (kVA)]	4.6 (5.1)	5.8 (6.4)	8.2 (8.9)	10.1 (11.1)	10.8 (12.3)
Noise level (Front 1 m/Height 1 m) Note 5)			[dB (A)]	68				
Waterproof specification				IPX4				
Accessories				Alarm code list stickers 2 pcs. (English 1 pc./Japanese 1 pc.), Operation Manual (for installation/operation) 2 pcs. (English 1 pc./Japanese 1 pc.), Y-strainer (40 meshes) 25A, Barrel nipple 25A, Anchor bolt fixing brackets 2 pcs. (including 6 M8 bolts) Note 9)				
Weight (dry state)			[kg]	Approx. 180	Approx. 215		Approx. 280	

Note 1) Use a 15 % ethylene glycol aqueous solution if operating in a place where the ambient temperature is from -5 to 10 °C and/or circulating fluid temperature is 10 °C or less.
Use a 40 % ethylene glycol aqueous solution if operating in a place where the ambient temperature is from -20 to 5 °C.
Note 2) Use fluid in condition below as the circulating fluid.
Tap water: Standard of The Japan Refrigeration And Air Conditioning Industry Association (JRA GL-02-1994)
15 to 40 % ethylene glycol aqueous solution: diluted by tap water in condition above without any additives such as antiseptics.
Deionised water: Electric conductivity 1 μS/cm or higher (Electric resistivity 1 MΩ·cm or lower)
Note 3) ① Ambient temperature: 32 °C, ② Circulating fluid: Tap water, ③ Circulating fluid temperature: 20 °C, ④ Circulating fluid flow rate: Rated flow, ⑤ Power supply: 400 V AC
Note 4) ① Ambient temperature: 32 °C, ② Circulating fluid: Tap water, ③ Circulating fluid flow rate: Rated flow, ④ Power supply: 400 V AC
Note 5) ① Ambient temperature: 32 °C, ② Circulating fluid: Tap water, ③ Circulating fluid temperature: 20 °C, ④ Load: Same as the cooling capacity, ⑤ Circulating fluid flow rate: Rated flow, ⑥ Power supply: 400 V AC, ⑦ Piping length: Shortest
Note 6) With the pressure control mode by inverter. When the pressure control mode is not used, the pump power frequency set mode can be used.
Note 7) Fluid flow rate to maintain the cooling capacity and the temperature stability. If the actual flow rate is lower than this, please install a by-pass piping.
Note 8) If the product is used at altitude of 1000 m or higher, refer to "Operating Environment/Storage Environment" (page 39) Item 14 "* For altitude of 1000 m or higher".
Note 9) The anchor bolt fixing brackets (including 6 M8 bolts) are used for fixing to wooden skids when packaging the thermo-chiller. No anchor bolt is included.

Thermo-chiller Inverter Type Large Type
Water-cooled 400 V Type
Series HRSH

CE RoHS

How to Order

HRSH 250 – W F – 40 – □

Cooling capacity

100	11.5 kW
150	15.7 kW
200	20.6 kW
250	24 kW

Cooling method

W	Water-cooled refrigeration

Pipe thread type

—	Rc
F	G (with Rc-G conversion fitting)
N	NPT (with Rc-NPT conversion fitting)

Power supply

40	3-phase 380 to 415 V AC (50 / 60 Hz)

Option

—	None
A	With caster adjuster-foot kit
K Note)	With fluid fill port

Note) This is a manual fluid fill port that is different from the automatic fluid fill port. Fluid can be supplied manually into the tank without removing the side panel.
(Fluid can be supplied manually for the model without the symbol K if the side panel is removed.)

Specifications

Model			HRSH100-W□-40-□	HRSH150-W□-40-□	HRSH200-W□-40-□	HRSH250-W□-40-□
Cooling method			Water-cooled refrigeration			
Refrigerant			R410A (HFC): GWP2088			
Control method			PID control			
Ambient temperature/Altitude Note 1), Note 8)		[°C]	Temperature: 2 to 45, Altitude: less than 3000 m			
Circulating fluid system	Circulating fluid Note 2)		Tap water, 15 % Ethylene glycol aqueous solution, Deionised water			
	Set temperature range Note 1)	[°C]	5 to 35			
	Cooling capacity Note 3), Note 8)	[kW]	11.5	15.7	20.6	24
	Heating capacity Note 4)	[kW]	2.5	3.5	4.0	7.2
	Temperature stability Note 5)	[°C]	±0.1			
	Pump capacity: Rated flow (Outlet)	[l/min]	45 (0.43 MPa)	45 (0.45 MPa)		
	Pump capacity: Maximum flow rate	[l/min]	120	130		
	Pump capacity: Maximum pump head	[m]	50			
	Settable pressure range Note 6)	[MPa]	0.1 to 0.5			
	Minimum operating flow rate Note 7)	[l/min]	20	25		
	Tank capacity	[L]	25	42		
	Circulating fluid outlet, circulating fluid return port		Rc 1 (Symbol F: G 1, Symbol N: NPT 1)			
	Tank drain port		Rc 3/4 (Symbol F: G 3/4, Symbol N: NPT 3/4)			
	Automatic fluid fill system (Standard): Supply side pressure range	[MPa]	0.2 to 0.5			
	Automatic fluid fill system (Standard): Supply side fluid temperature	[°C]	5 to 35			
	Automatic fluid fill system (Standard): Automatic fluid fill port		Rc 1/2 (Symbol F: G 1/2, Symbol N: NPT 1/2)			
	Automatic fluid fill system (Standard): Overflow port		Rc 1 (Symbol F: G 1, Symbol N: NPT 1)			
	Fluid contact material	Metal	Stainless steel, Copper (Heat exchanger brazing), Brass (Y-strainer)			
	Fluid contact material	Resin	PTFE, PU, FKM, EPDM, PVC, NBR, POM, PE, NR			
Facility water system	Temperature range	[°C]	5 to 40			
	Pressure range	[MPa]	0.3 to 0.5			
	Required flow	[l/min]	25	30	50	55
	Facility water pressure differential	[MPa]	0.3 or more			
	Facility water inlet/outlet		Rc 1 (Symbol F: G 1, Symbol N: NPT 1)			
	Fluid contact material	Metal	Stainless steel, Copper (Heat exchanger brazing), Bronze, Brass			
	Fluid contact material	Resin	PTFE, NBR, EPDM			
Electrical system	Power supply		3-phase 380 to 415 V AC (50 / 60 Hz), Allowable voltage range ±10 % (No continuous voltage fluctuation)			
	Applicable earth leakage breaker: Rated current	[A]	20	30		
	Applicable earth leakage breaker: Sensitivity of leak current	[mA]	30			
	Rated operating current Note 5)	[A]	7.3	8.8	10.6	12.8
	Rated power consumption Note 5)	[kW (kVA)]	4.4 (5.0)	5.3 (6.1)	6.6 (7.4)	8.2 (8.9)
Noise level (Front 1 m/Height 1 m) Note 5)		[dB (A)]	61	60		61
Waterproof specification			IPX4			
Accessories			Alarm code list stickers 2 pcs. (English 1 pc./Japanese 1 pc.), Operation Manual (for installation/operation) 2 pcs. (English 1 pc./Japanese 1 pc.), Y-strainer (40 meshes) 25A, Barrel nipple 25A, Anchor bolt fixing brackets 2 pcs. (including 6 M8 bolts) Note 9)			
Weight (dry state)		[kg]	Approx. 150	Approx. 180		

Note 1) Use a 15 % ethylene glycol aqueous solution if operating in a place where the ambient temperature and/or circulating fluid temperature is 10 °C or less.
Note 2) Use fluid in condition below as the circulating fluid.
Tap water: Standard of The Japan Refrigeration And Air Conditioning Industry Association (JRA GL-02-1994)
15 % ethylene glycol aqueous solution: diluted by tap water in condition above without any additives such as antiseptics.
Deionised water: Electric conductivity 1 μS/cm or higher (Electric resistivity 1 MΩ·cm or lower)
Note 3) ① Facility water temperature: 32 °C, ② Circulating fluid: Tap water, ③ Circulating fluid temperature: 20 °C, ④ Circulating fluid flow rate: Rated flow, ⑤ Power supply: 400 V AC
Note 4) ① Facility water temperature: 32 °C, ② Circulating fluid: Tap water, ③ Circulating fluid flow rate: Rated flow, ④ Power supply: 400 V AC
Note 5) ① Facility water temperature: 32 °C, ② Circulating fluid: Tap water, ③ Circulating fluid temperature: 20 °C, ④ Load: Same as the cooling capacity, ⑤ Circulating fluid flow rate: Rated flow, ⑥ Power supply: 400 V AC, ⑦ Piping length: Shortest
Note 6) With the pressure control mode by inverter. When the pressure control mode is not used, the pump power frequency set mode can be used.
Note 7) Fluid flow rate to maintain the cooling capacity and the temperature stability. If the actual flow rate is lower than this, please install a by-pass piping.
Note 8) If the product is used at altitude of 1000 m or higher, refer to "Operating Environment/Storage Environment" (page 39) Item 14 "∗ For altitude of 1000 m or higher".
Note 9) The anchor bolt fixing brackets (including 6 M8 bolts) are used for fixing to wooden skids when packaging the thermo-chiller. No anchor bolt is included.

Cooling Capacity

∗ If the product is used at altitude of 1000 m or higher, refer to “Operating Environment/Storage Environment” (page 39) Item 13 “∗ For altitude of 1000 m or higher”.

HRSH100-A□-20-□S / HRSH100-A□-40-□

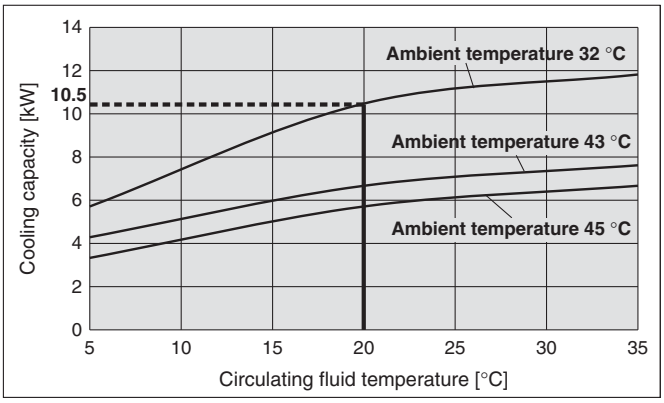

HRSH100-W□-20-□S / HRSH100-W□-40-□

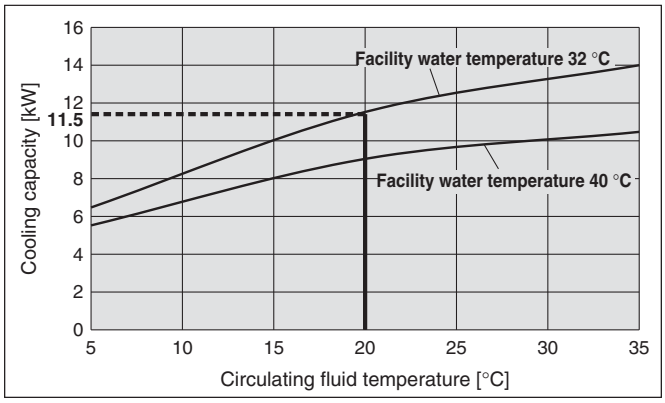

HRSH150-A□-20-□S / HRSH150-A□-40-□

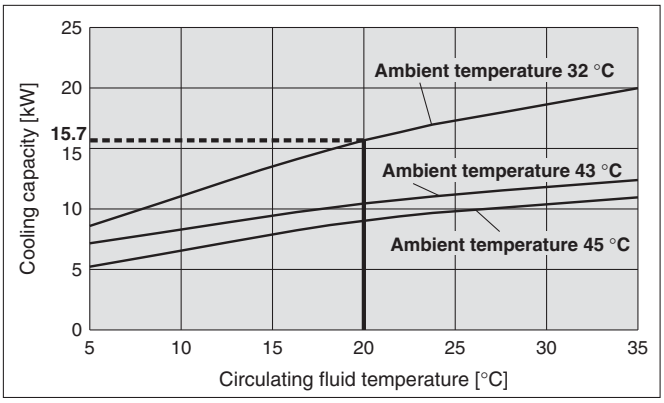

HRSH150-W□-20-□S / HRSH150-W□-40-□

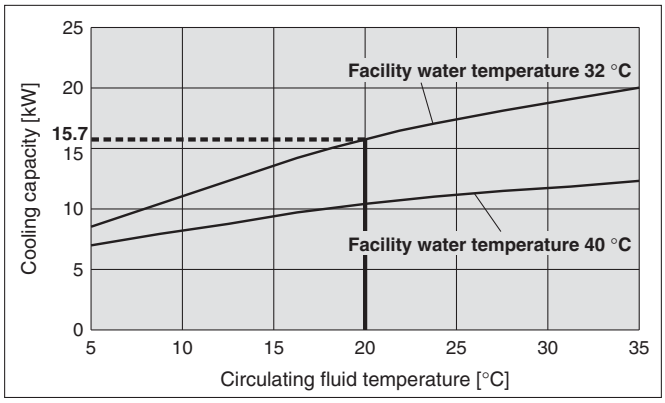

HRSH200-A□-20-□S / HRSH200-A□-40-□

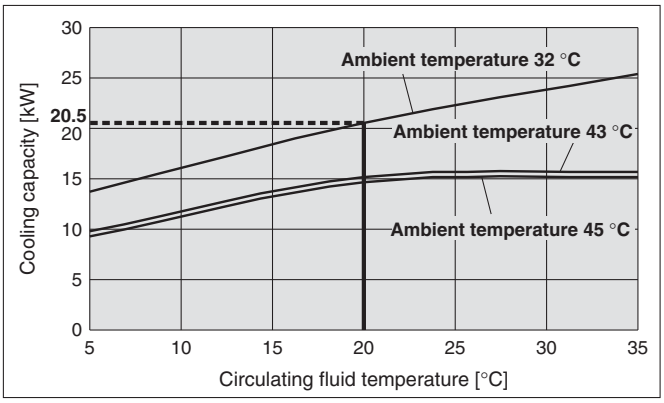

HRSH200-W□-20-□S / HRSH200-W□-40-□

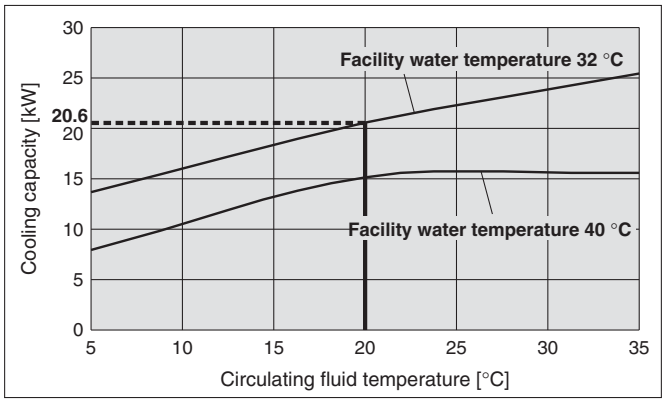

HRSH250-A□-20-□S / HRSH250-A□-40-□

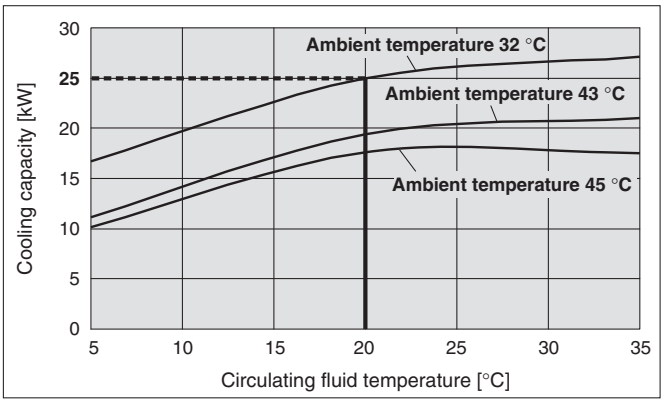

HRSH250-W□-20-□S / HRSH250-W□-40-□

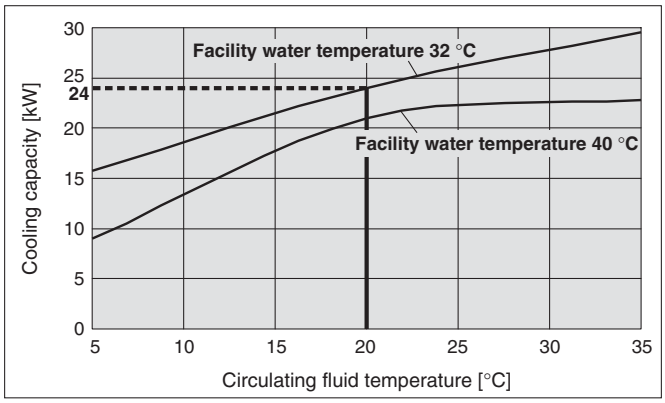

Cooling Capacity

∗ If the product is used at altitude of 1000 m or higher, refer to “Operating Environment/Storage Environment” (page 39) Item 13 “∗ For altitude of 1000 m or higher”.

HRSH300-A□-20/40-□

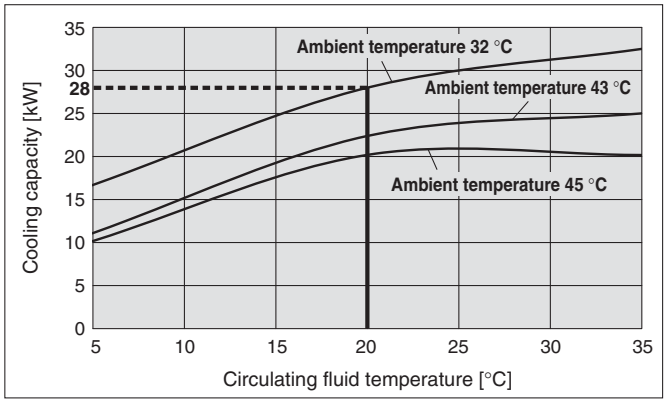

Pump Capacity

HRSH100-A□-20-□S / HRSH100-A□-40-□
HRSH100-W□-20-□S / HRSH100-W□-40-□

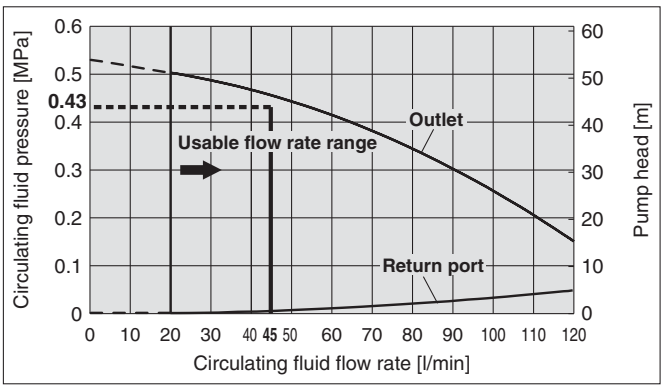

HRSH150-A□-20-□S / HRSH150-A□-40-□
HRSH150-W□-20-□S / HRSH150-W□-40-□
HRSH200-A□-20-□S / HRSH200-A□-40-□
HRSH200-W□-20-□S / HRSH200-W□-40-□
HRSH250-W□-20-□S / HRSH250-W□-40-□

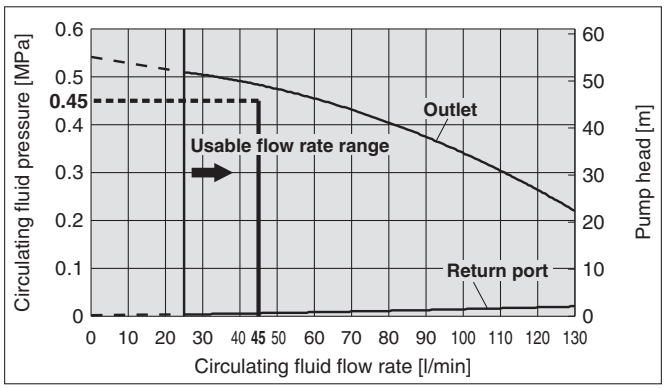

HRSH250-A□-20-□S / HRSH250-A□-40-□
HRSH300-A□-20-□S / HRSH300-A□-40-□

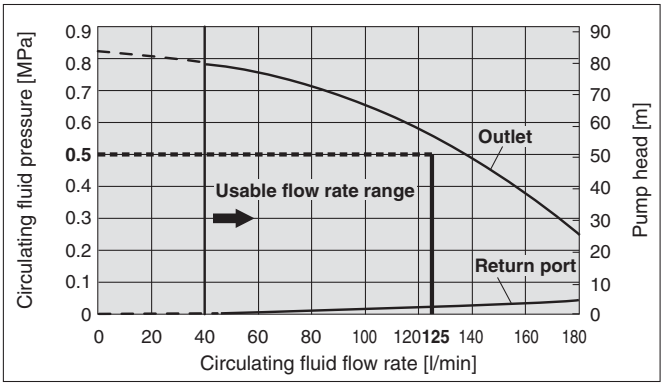

Dimensions

HRSH100/150/200-A-20-S (Air-cooled 200 V type)
HRSH100/150/200-A-40 (Air-cooled 400 V type)

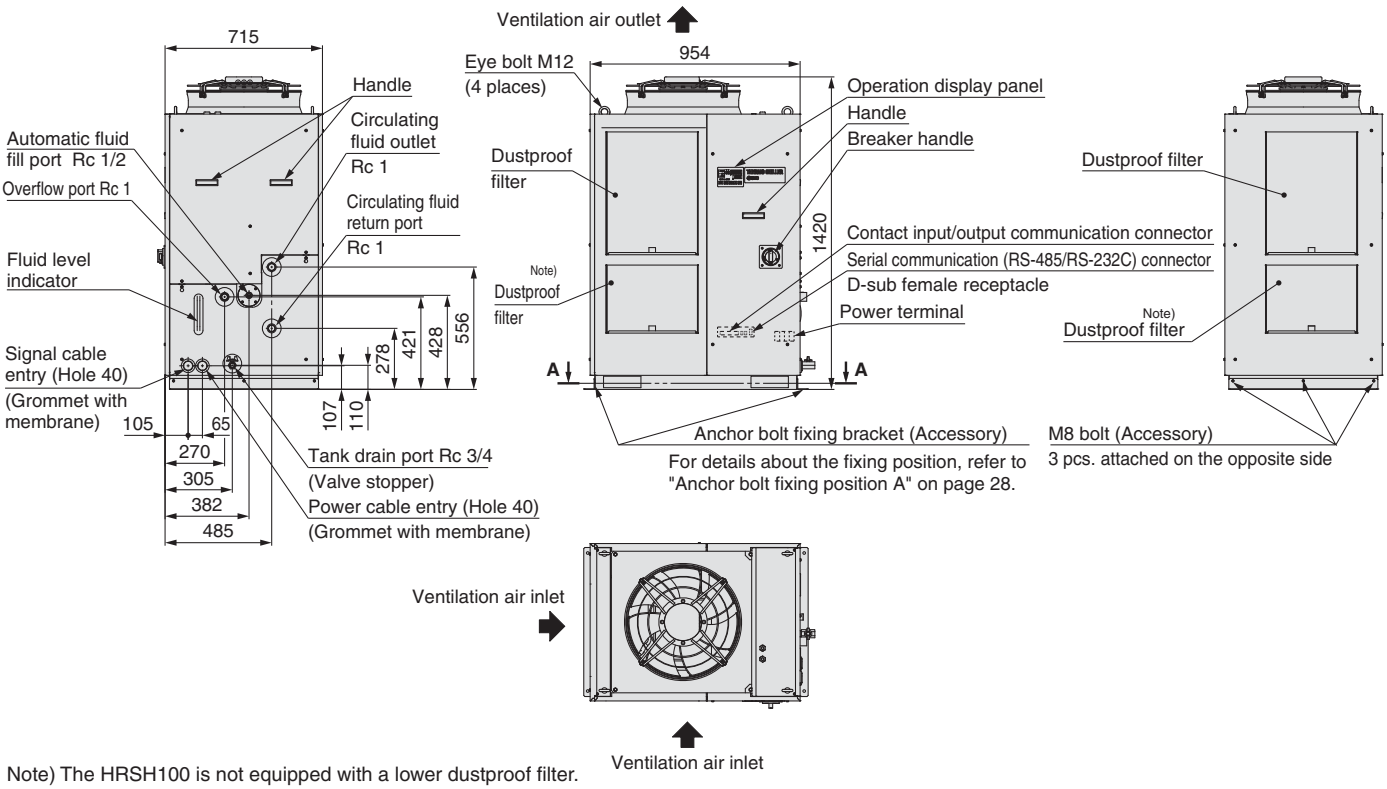

Note) The HRSH100 is not equipped with a lower dustproof filter.

HRSH250/300-A-20-S (Air-cooled 200 V type)
HRSH250/300-A-40 (Air-cooled 400 V type)

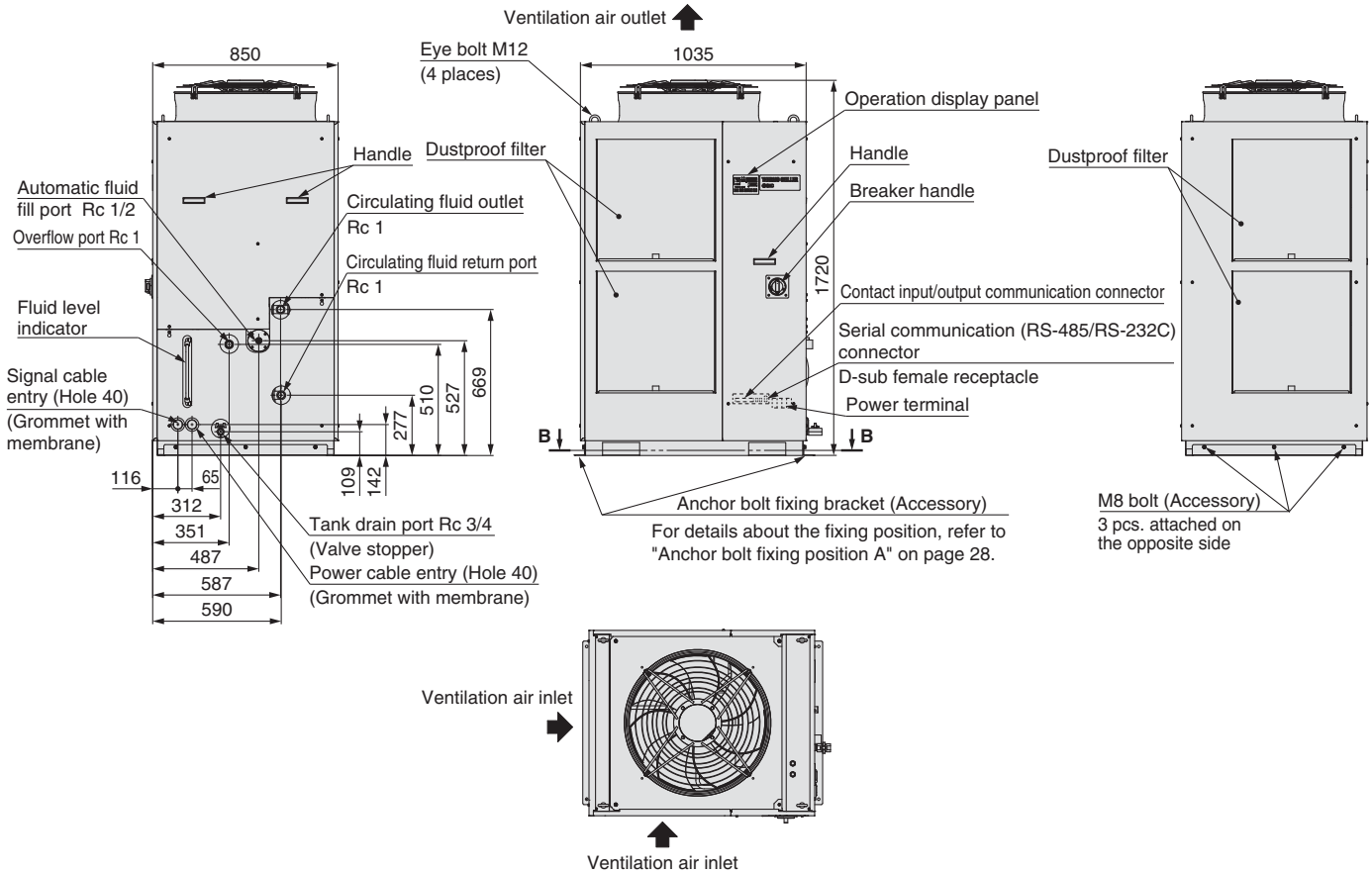

Dimensions

HRSH100/150/200/250-W-20-S (Water-cooled 200 V type)
HRSH100/150/200/250-W-40 (Water-cooled 400 V type)

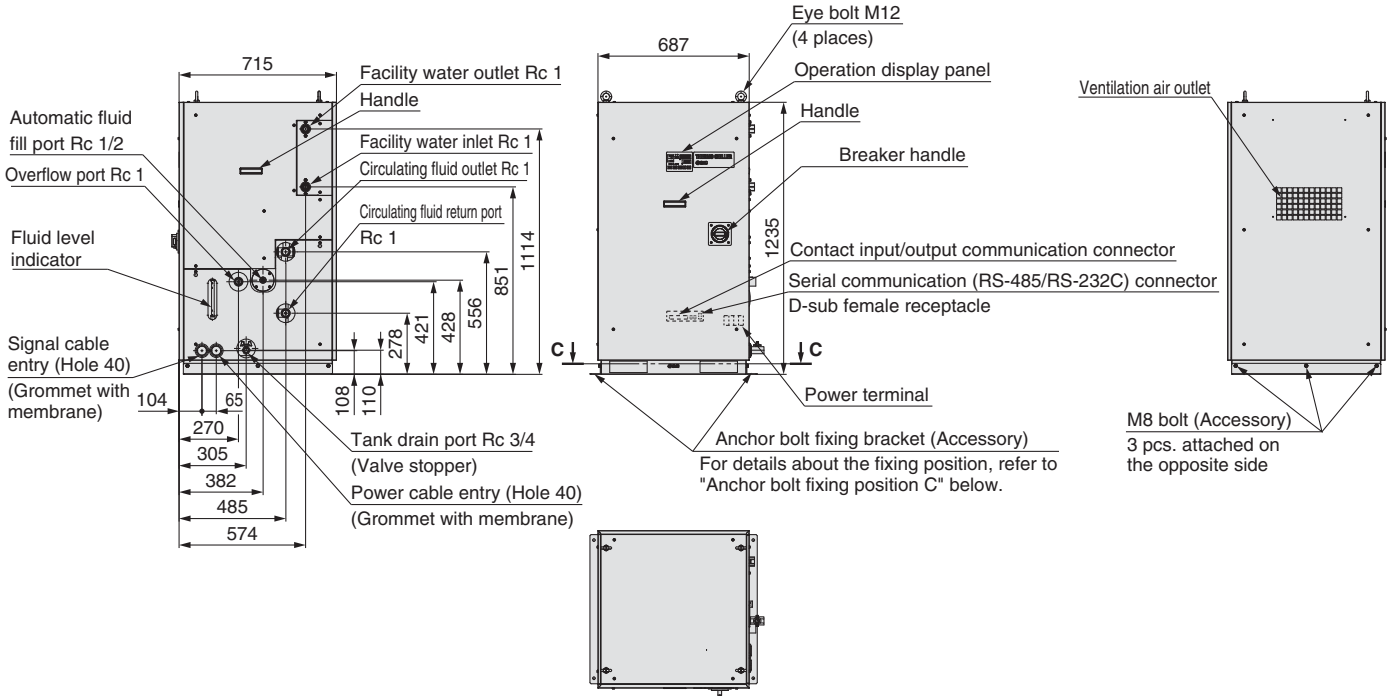

Anchor bolt fixing position A

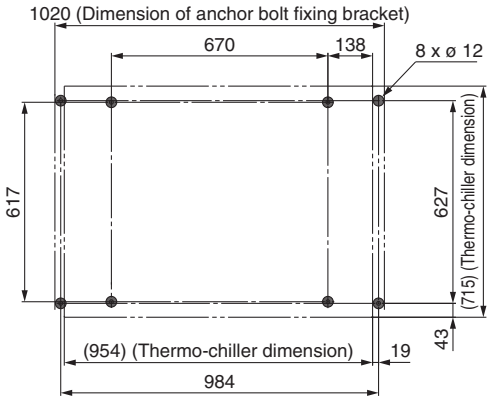

View A-A

Anchor bolt fixing position B

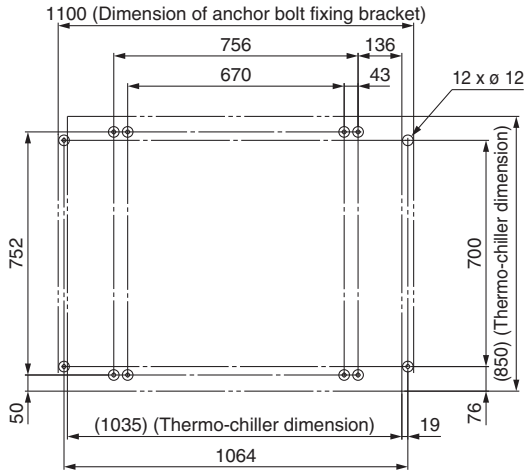

View B-B

Anchor bolt fixing position C

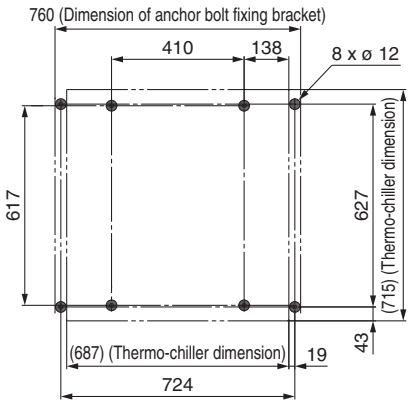

View C-C

Accessory: Y-strainer mounting view

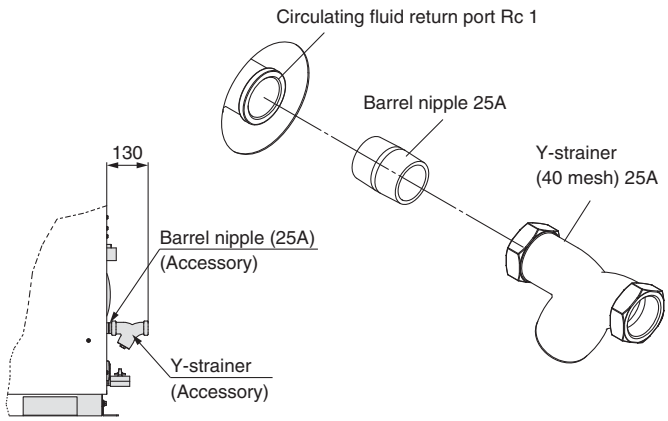

Recommended External Piping Flow

External piping circuit is recommended as shown below.

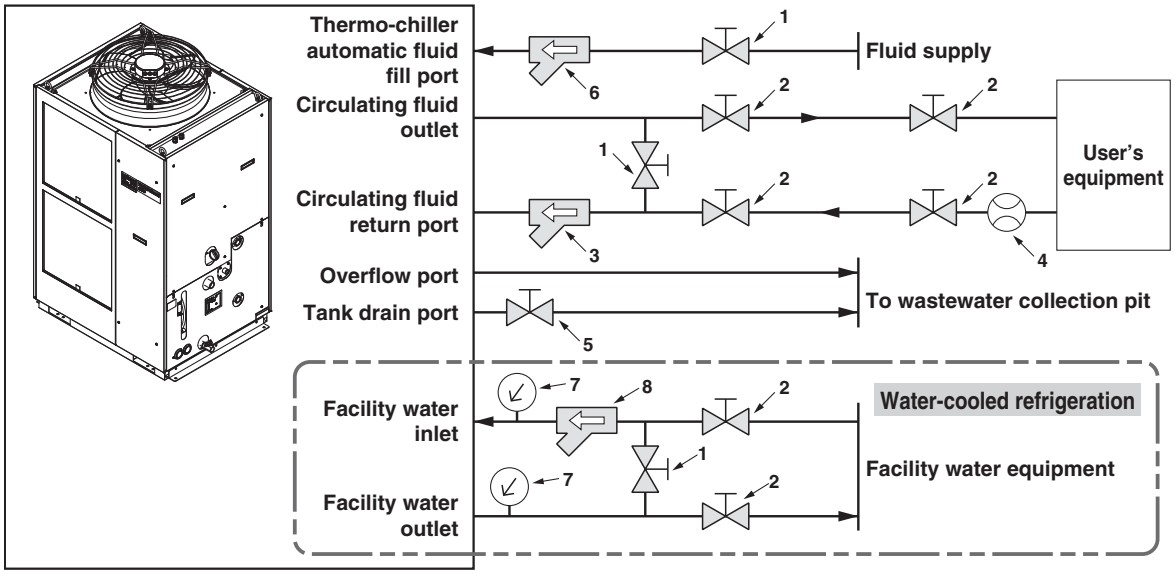

∗ Ensure that the overflow port is connected to the wastewater collection pit in order to avoid damage to the tank of the thermo-chiller.

No.	Description	Size
1	Valve	Rc 1/2
2	Valve	Rc 1
3	Y-strainer (#40) (Accessory)	Rc 1
4	Flow meter	Prepare a flow meter with an appropriate flow range.
5	Valve (Part of thermo-chiller)	Rc 3/4
6	Y-strainer (#40)	Rc 1/2
7	Pressure gauge	0 to 1.0 MPa
8	Y-strainer (#40)	Rc 1

Cable Specifications

Power supply and signal cable should be prepared by user.

Power Cable Specifications

Applicable model	Rated value for thermo-chiller			Power cable examples	
	Power supply	Applicable breaker rated current	Terminal block thread size	Cable size	Crimp terminal on the thermo-chiller side
HRSH100-□□-20S HRSH150-□□-20S	3-phase 200 V AC (50 Hz) 3-phase 200 to 230 V AC (60 Hz)	30 A	M5	4 cores x 5.5 mm^2 (4 cores x AWG10) (Including grounding cable)	R5.5-5
HRSH200-□□-20S		40 A		4 cores x 8 mm^2 (4 cores x AWG8) (Including grounding cable)	R8-5
HRSH250-□□-20S		50 A		4 cores x 8 mm^2 (4 cores x AWG8) (Including grounding cable)	R8-5
HRSH100-□□-40	3-phase 380 to 415 V AC (50 / 60 Hz)	20 A		3 x 5.5 mm^2 (3 x AWG10) (Power supply) 1 x 14 mm^2 (1 x AWG6) (Grounding cable)	R5.5-5 (Power supply) R14-5 (Grounding cable)
HRSH150-□□-40 HRSH200-□□-40 HRSH250-□□-40		30 A			

Note) An example of the cable specifications is when two kinds of vinyl insulated wires with a continuous allowable operating temperature of 70 °C at 600 V, are used at an ambient temperature of 30 °C. Select the proper size of cable according to an actual condition.

Signal Cable Specifications

Terminal specifications		Cable specifications
Terminal block screw diameter	Recommended crimp terminal	0.75 mm^2 (AWG18) Shielded cable
M3	Y-shape crimp terminal 1.25Y-3	

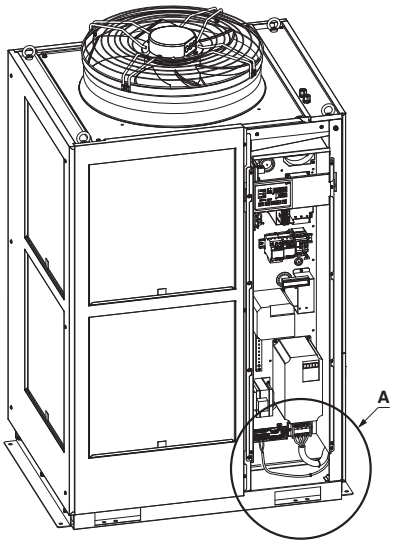

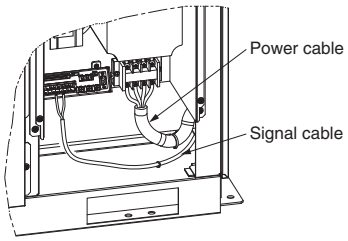

Partially enlarged view A

Operation Display Panel

The basic operation of this unit is controlled through the operation display panel on the front of the product.

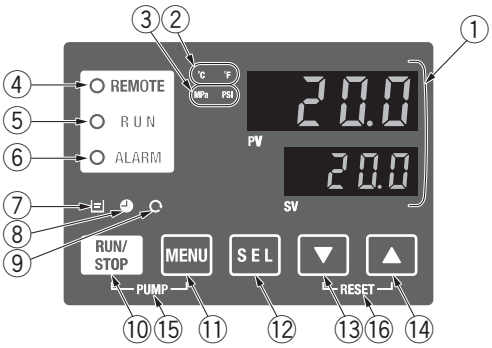

No.	Description	Function	
①	**Digital display (7-segment and 4 digits)**	PV	Displays the circulating fluid current discharge temperature and pressure and alarm codes and other menu items (codes).
		SV	Displays the circulating fluid discharge temperature and the set values of other menus.
②	**[°C] [°F] lamp**	Equipped with a unit conversion function. Displays the unit of displayed temperature (default setting: °C).	
③	**[MPa] [PSI] lamp**	Equipped with a unit conversion function. Displays the unit of displayed pressure (default setting: MPa).	
④	**[REMOTE] lamp**	Enables remote operation (start and stop) by communication. Lights up during remote operation.	
⑤	**[RUN] lamp**	Lights up when the product is started, and goes off when it is stopped. Flashes during stand-by for stop or anti-freezing function, or independent operation of the pump.	
⑥	**[ALARM] lamp**	Flashes with buzzer when alarm occurs.	
⑦	**[ ] lamp**	Lights up when the surface of the fluid level indicator falls below the L level.	
⑧	**[ ] lamp**	Equipped with a timer for start and stop. Lights up when this function is operated.	
⑨	**[ ] lamp**	Equipped with a power failure auto-restart function, which restarts the product automatically after stopped due to a power failure. Lights up when this function is operated.	
⑩	**[RUN/STOP] key**	Makes the product start or stop.	
⑪	**[MENU] key**	Shifts the main menu (display screen of circulating fluid discharge temperature and pressure) and other menus (for monitoring and entry of set values).	
⑫	**[SEL] key**	Changes the item in menu and enters the set value.	
⑬	**[▼] key**	Decreases the set value.	
⑭	**[▲] key**	Increases the set value.	
⑮	**[PUMP] key**	Press the [MENU] and [RUN/STOP] keys simultaneously. The pump starts running independently to make the product ready for start-up (release the air).	
⑯	**[RESET] key**	Press the [▼] and [▲] keys simultaneously. The alarm buzzer is stopped and the [ALARM] lamp is reset.	

List of Function

No.	Function	Outline
1	**Main display**	Displays the current and set temperature of the circulating fluid, discharge pressure of the circulating fluid. Changes the circulating fluid set temperature.
2	**Alarm display menu**	Indicates alarm number when an alarm occurs.
3	**Inspection monitor menu**	Product temperature, pressure and accumulated operating time can be checked as daily inspection. Use these for daily inspection.
4	**Key-lock**	Keys can be locked so that set values cannot be changed by operator error.
5	**Timer for operation start/stop**	Timer is used to set the operation start/stop.
6	**Signal for the completion of preparation**	A signal is output when the circulating fluid temperature reaches the set temperature, when using contact input/output and serial communication.
7	**Offset function**	Use this function when there is a temperature offset between the discharge temperature of the thermo-chiller and user's equipment.
8	**Reset after power failure**	Start operation automatically after the power supply is turned on.
9	**Key click sound setting**	Operation panel key sound can be set on/off.
10	**Changing temp. unit**	Temperature unit can be changed. Centigrade [°C] ⇔ Fahrenheit [°F]
11	**Changing pressure unit**	Pressure unit can be changed. MPa ⇔ PSI
12	**Data reset**	Functions can be reset to the default settings (settings when shipped from the factory).
13	**Accumulation time reset**	Reset function when the pump, the fan or the compressor is replaced. Reset the accumulated time here.
14	**Pump operation mode set**	The fluid supply mode of the pump can be changed Pressure control mode ⇔ Frequency set mode
15	**Anti-freezing function**	Circulating fluid is protected from freezing during winter or at night. Set beforehand if there is a risk of freezing.
16	**Warming-up function**	When circulating fluid temperature rising time at starting needs shortening during winter or at night, set beforehand.
17	**Anti-snow coverage function**	If there will be a possibility of the snow coverage due to the change of the installation environment (season, weather), set beforehand. Note)
18	**Alarm buzzer sound setting**	Alarm sound can be set to on/off.
19	**Alarm customizing**	Operation during alarm condition and threshold values can be changed depending on the alarm type.
20	**Communication**	This function is used for contact input/output or serial communication.

Note) Does not occur on HRSH090.

Alarm

This unit has 42 types of alarms as standard, and displays each of them by its alarm code on the PV screen with the [ALARM] lamp ([LOW LEVEL] lamp) lit up on the operation display panel. The alarm can be read out through communication.

Code	Alarm message
AL01	Low level in tank
AL02	High circulating fluid discharge temp.
AL03	Circulating fluid discharge temp. rise
AL04	Circulating fluid discharge temp. drop
AL05	High circulating fluid return temp.
AL06	High circulating fluid discharge pressure Note 1)
AL07	Abnormal pump operation Note 1)
AL08	Circulating fluid discharge pressure rise
AL09	Circulating fluid discharge pressure drop
AL10	High compressor intake temp.
AL11	Low compressor intake temp.
AL12	Low super heat temp.
AL13	High compressor discharge pressure
AL15	Refrigeration circuit pressure (high pressure side) drop
AL16	Refrigeration circuit pressure (low pressure side) rise
AL17	Refrigeration circuit pressure (low pressure side) drop

Code	Alarm message
AL18	Compressor running failure
AL19	Communication error
AL20	Memory error
AL21	DC line fuse cut
AL22	Circulating fluid discharge temp. sensor failure
AL23	Circulating fluid return temp. sensor failure
AL24	Compressor intake temp. sensor failure
AL25	Circulating fluid discharge pressure sensor failure
AL26	Compressor discharge pressure sensor failure
AL27	Compressor intake pressure sensor failure
AL28	Pump maintenance
AL29	Fan maintenance Note 1)
AL30	Compressor maintenance
AL31	Contact input 1 signal detection
AL32	Contact input 2 signal detection
AL37	Compressor discharge temp. sensor failure

Code	Alarm message
AL38	Compressor discharge temp. rise
AL39	Internal unit fan stoppage
AL40	Dustproof filter maintenance Note 2)
AL41	Power stoppage
AL42	Compressor waiting
AL43	Fan breaker trip Note 2)
AL44	Fan inverter error Note 2)
AL45	Compressor breaker trip Notes 3,4)
AL46	Compressor inverter error
AL47	Pump breaker trip Notes 3,4)
AL48	Pump inverter error
AL49	Air exhaust fan stoppage Note 5)

Note 1) Does only occur on HRSH090.
Note 2) Does not occur on the product of water-cooled refrigeration type.
Note 3) Does not occur on the product of power supply specification '-20'.
Note 4) Does not occur on HRSH090.
Note 5) Does not occur on the product of air-cooled refrigeration type.
∗ For details, read the Operation Manual.

For details, refer to the Operation Manual. Please download it via our website, http://www.smc.eu

Communication Function

Contact Input/Output

Item		Specifications
Connector type		M3 terminal block
Input signal	**Insulation method**	Photocoupler
	Rated input voltage	24 V DC
	Operating voltage range	21.6 to 26.4 V DC
	Rated input current	5 mA TYP
	Input impedance	4.7 kΩ
Contact output signal	**Rated load voltage**	48 V AC or less/30 V DC or less
	Maximum load current	500 mA AC/DC (resistance load)
	Minimum load current	5 V DC 10 mA
Output voltage		24 V DC ±10 % 500 mA MAX (No inductive load)
Circuit diagram		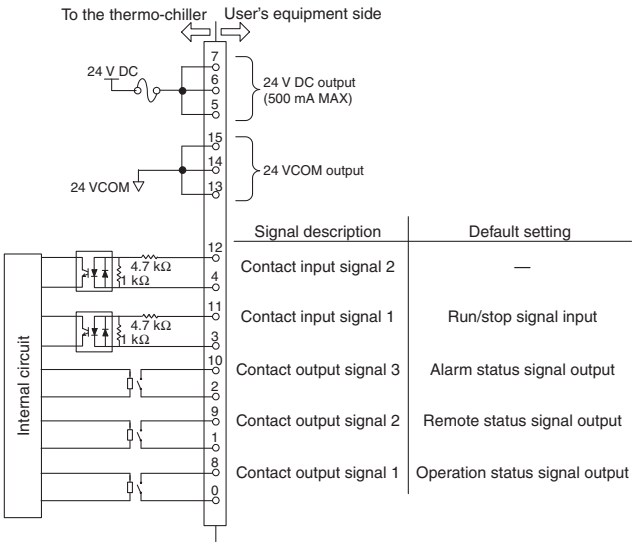

∗ The pin numbers and output signals can be set by user. For details, refer to "Operation Manual, Communication function".

Serial Communication

The serial communication (RS-485/RS-232C) enables the following items to be written and read out.
For details, refer to "Operation Manual, Communication function".

Writing

Run/Stop
Circulating fluid temperature setting (SV)

Readout

Circulating fluid present temperature
Circulating fluid discharge pressure
Status information
Alarm occurrence information

Item	Specifications	
Connector type	D-sub 9-pin, Female connector	
Protocol	Modicon Modbus compliant/Simple communication protocol	
Standards	EIA standard RS-485	EIA standard RS-232C
Circuit diagram	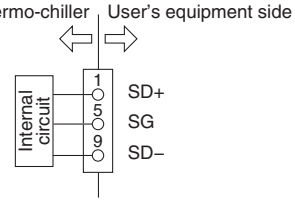	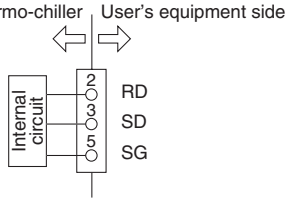

∗ The terminal resistance of RS-485 (120 Ω) can be switched by the operation display panel. For details, refer to "Operation Manual, Communication function".
Do not connect other than in the way shown above, as it can result in failure.

Please download the Operation Manual via our website, http://www.smc.eu

Options

Note) Select the option when ordering the thermo-chiller because the option cannot be added after purchasing the unit.

K Option symbol

With Fluid Fill Port

HRSH□-□□-□-K

With fluid fill port

When the automatic fluid fill in port is not used,
fluid can be supplied manually without removing the panel.

Applicable model	Dimension [mm]	
	A	B
HRSH100-□□-20-KS **HRSH100-□□-40-K** **HRSH150-□□-20-KS** **HRSH150-□□-40-K** **HRSH200-□□-20-KS** **HRSH200-□□-40-K** **HRSH250-W□-20-KS** **HRSH250-W□-40-K**	271	609
HRSH250-A□-20-KS **HRSH250-A□-40-K** **HRSH300-A□-20-KS** **HRSH300-A□-40-K**	372	708

Note) Not for HRSH090.

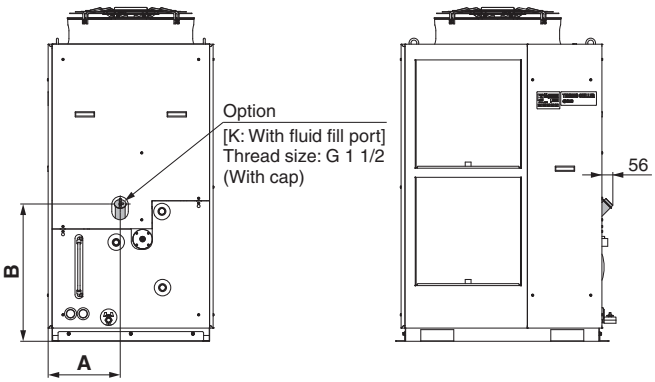

(The figure shows the HRSH250-A-20-KS.)

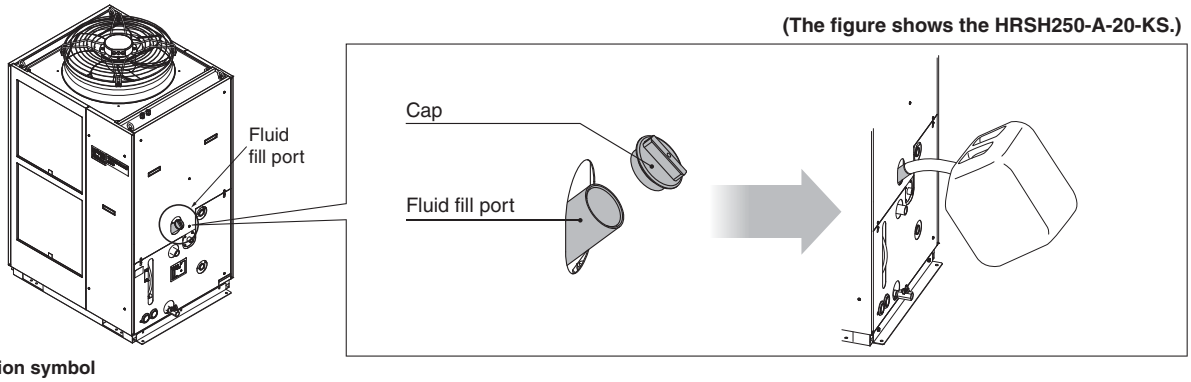

A Option symbol

Caster Adjuster-foot Kit

This is a set of unfixed casters and adjuster feet stop.
When installed by user, it is necessary to lift the thermo-chiller by a forklift or sling work.
Carefully read the procedure manual included with this kit before performing the installation.

Part no.	Applicable model	Dimension [mm]		
		A	B	C
HRS-KS001	**HRSH250-A□-20-AS** **HRSH250-A□-40-A** **HRSH300-A□-20-AS** **HRSH300-A□-40-A**	916	536	1838
HRS-KS002	**HRSH100-A□-20-AS** **HRSH100-A□-40-A** **HRSH150-A□-20-AS** **HRSH150-A□-40-A** **HRSH200-A□-20-AS** **HRSH200-A□-40-A**	830	401	1538
	HRSH100-W□-20-AS **HRSH100-W□-40-A** **HRSH150-W□-20-AS** **HRSH150-W□-40-A** **HRSH200-W□-20-AS** **HRSH200-W□-40-A** **HRSH250-W□-20-AS** **HRSH250-W□-40-A**	570		1353

Note) Not for HRSH090.

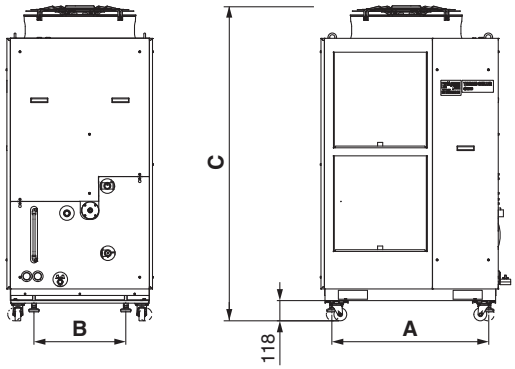

Fig. 1 Mounting view

Parts List

Description
Procedure manual
Caster adjuster-foot bracket (2 pcs.)
Fixing bolt (M8) (8 pcs.)

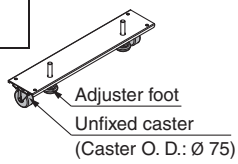

Fig. 2 Caster adjuster-foot bracket (2 pcs.)

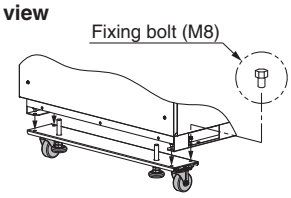

Fig. 3 Fixing bolt (8 pcs.)